Safe Operation Practices • Set-Up • Operation • Maintenance • Service • Troubleshooting • Warranty

Cub Cadet®

OPERATOR'S MANUAL

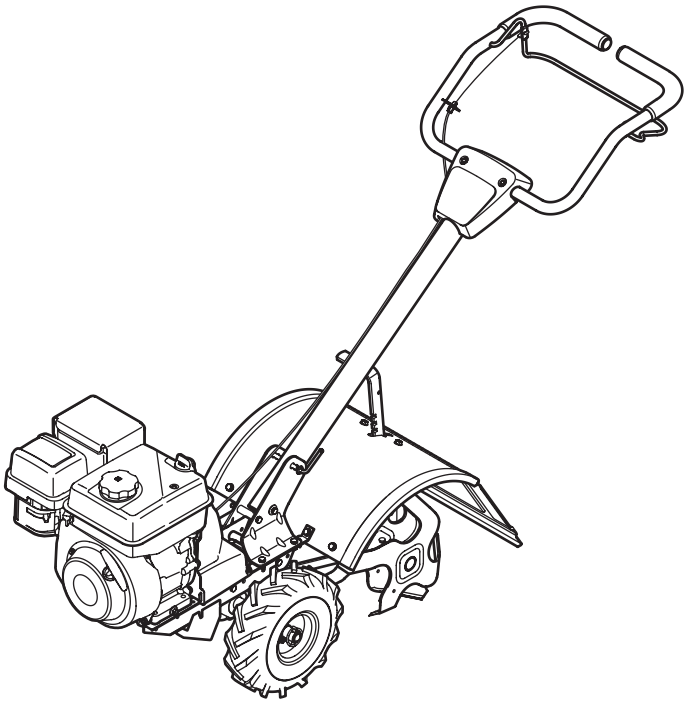

Rear Tine Tiller — Model RT 35

⚠ WARNING

READ AND FOLLOW ALL SAFETY RULES AND INSTRUCTIONS IN THIS MANUAL BEFORE ATTEMPTING TO OPERATE THIS MACHINE. FAILURE TO COMPLY WITH THESE INSTRUCTIONS MAY RESULT IN PERSONAL INJURY.

CUB CADET LLC, P.O. BOX 361131 CLEVELAND, OHIO 44136-0019

Printed In USA

Form No. 769-10574
(January 20, 2015)

To The Owner

1

Thank You

Thank you for purchasing a Cub Cadet Garden Tiller. It was carefully engineered to provide excellent performance when properly operated and maintained.

Please read this entire manual prior to operating the equipment. It instructs you how to safely and easily set up, operate and maintain your machine. Please be sure that you, and any other persons who will operate the machine, carefully follow the recommended safety practices at all times. Failure to do so could result in personal injury or property damage.

All information in this manual is relative to the most recent product information available at the time of printing. Review this manual frequently to familiarize yourself with the machine, its features and operation. Please be aware that this Operator's Manual may cover a range of product specifications for various models. Characteristics and features discussed and/or illustrated in this manual may not be applicable to all models. We reserve the right to change product specifications, designs and equipment without notice and without incurring obligation.

If applicable, the power testing information used to establish the power rating of the engine equipped on this machine can be found at www.opei.org or the engine manufacturer's web site.

If you have any problems or questions concerning the machine, phone your local Cub Cadet dealer or contact us directly. Cub Cadet's Customer Support telephone numbers, website address and mailing address can be found on this page. We want to ensure your complete satisfaction at all times.

Throughout this manual, all references to *right* and *left* side of the machine are observed from the operating position.

Table of Contents

Safe Operation Practices 3
Assembly & Set-Up 7
Operation 10
Maintenance & Adjustment 16
Service 18
Troubleshooting 20
Replacement Parts 21
Warranty ..... Back Cover

Record Product Information

Before setting up and operating your new equipment, please locate the model plate on the equipment and record the information in the provided area to the right. You can locate the model plate by standing at the operator's position and looking down at the rear of the tiller. This information will be necessary, should you seek technical support via our web site, Customer Support Department, or with a local authorized service dealer.

Model Number

☐☐☐☐☐☐☐☐☐☐☐

Serial Number

☐☐☐☐☐☐☐☐☐☐☐

Product Registration and Customer Support

Please register your product on our website, www.cubcadet.com.

If you have difficulty assembling this product or have any questions regarding the controls, operation, or maintenance of this machine, you can seek help from the experts. Choose from the options below:

◊ Visit us on the web at www.cubcadet.com

See How-to Maintenance and Parts Installation Videos at **www.cubcadet.com/tutorials**

◊ Call a Customer Support Representative at (800) 965-4CUB

◊ Locate your nearest Cub Cadet Dealer at (877) 282-8684

◊ Write to Cub Cadet LLC • P.O. Box 361131 • Cleveland, OH • 44136-0019

Important Safe Operation Practices

2

WARNING! This symbol points out important safety instructions which, if not followed, could endanger the personal safety and/or property of yourself and others. Read and follow all instructions in this manual before attempting to operate this machine. Failure to comply with these instructions may result in personal injury.
When you see this symbol. **HEED ITS WARNING!**

CALIFORNIA PROPOSITION 65

WARNING! Engine Exhaust, some of its constituents, and certain vehicle components contain or emit chemicals known to State of California to cause cancer and birth defects or other reproductive harm.

WARNING! Battery posts, terminals, and related accessories contain lead and lead compounds, chemicals known to the State of California to cause cancer and reproductive harm. *Wash hands after handling*

DANGER! This machine was built to be operated according to the safe operation practices in this manual. As with any type of power equipment, carelessness or error on the part of the operator can result in serious injury. This machine is capable of amputating fingers, hands, toes and feet. Failure to observe the following safety instructions could result in serious injury or death.

Training

1. Read, understand, and follow all instructions on the machine and in the manual(s) before attempting to assemble and operate. Keep this manual in a safe place for future and regular reference and for ordering replacement parts.
2. Be familiar with all controls and their proper operation. Know how to stop the machine and disengage them quickly.
3. Never allow children under 14 years of age to operate this machine. Children 14 and over should read and understand the instructions and safe operation practices in this manual and on the machine and be trained and supervised by an adult.
4. Never allow adults to operate this machine without proper instruction.
5. Keep the area of operation clear of all persons, particularly small children and pets. Stop machine if anyone enters the area.

Preparation

1. Thoroughly inspect the area where the equipment is to be used. Remove all stones, sticks, wire, and other foreign objects which could be tripped over and cause personal injury.
2. Wear sturdy, rough-soled work shoes and close fitting slacks and shirt. Loose fitting clothes or jewelry can be caught in moving parts. Never operate this machine in bare feet or sandals.
3. Disengage clutch levers and shift (if provided) into neutral ("N") before starting the engine.
4. Never leave this machine unattended with the engine running.
5. Never attempt to make any adjustments while engine is running, except where specifically recommended in the operator's manual.

Safe Handling of Gasoline:

To avoid personal injury or property damage use extreme care in handling gasoline. Gasoline is extremely flammable and the vapors are explosive. Serious personal injury can occur when gasoline is spilled on yourself or your clothes which can ignite. Wash your skin and change clothes immediately.

a. Use only an approved gasoline container.
b. Never fill containers inside a vehicle or on a truck or trailer bed with a plastic liner. Always place containers on the ground away from your vehicle before filling.

c. When practical, remove gas-powered equipment from the truck or trailer and refuel it on the ground. If this is not possible, then refuel such equipment on a trailer with a portable container, rather than from a gasoline dispenser nozzle.

d. Keep the nozzle in contact with the rim of the fuel tank or container opening at all times until fueling is complete. Do not use a nozzle lock-open device.

e. Extinguish all cigarettes, cigars, pipes and other sources of ignition.

f. Never fuel machine indoors.

g. Never remove gas cap or add fuel while the engine is hot or running. Allow engine to cool at least two minutes before refueling.

h. Never over fill fuel tank. Fill tank to no more than ½ inch below bottom of filler neck to allow space for fuel expansion.

i. Replace gasoline cap and tighten securely.

j. If gasoline is spilled, wipe it off the engine and equipment. Move unit to another area. Wait 5 minutes before starting the engine.

k. To reduce fire hazards, keep machine free of grass, leaves, or other debris build-up. Clean up oil or fuel spillage and remove any fuel soaked debris.

l. Never store the machine or fuel container inside where there is an open flame, spark or pilot light as on a water heater, space heater, furnace, clothes dryer or other gas appliances.

Operation

1. Do not put hands or feet near rotating parts. Contact with the rotating parts can amputate hands and feet.
2. Do not operate machine while under the influence of alcohol or drugs.
3. Never operate this machine without good visibility or light. Always be sure of your footing and keep a firm hold on the handles.
4. Keep bystanders away from the machine while it is in operation. Stop the machine if anyone enters the area.
5. Be careful when tilling in hard ground. The tines may catch in the ground and propel the tiller forward. If this occurs, let go of the handle bars and do not restrain the machine.
6. Exercise extreme caution when operating on or crossing gravel surfaces. Stay alert for hidden hazards or traffic. Do not carry passengers.
7. Never operate the machine at high transport speeds on hard or slippery surfaces.
8. Exercise caution to avoid slipping or falling.
9. Look down and behind and use care when in reverse or pulling machine towards you.
10. Start the engine according to the instructions found in this manual and keep feet well away from the tines at all times.
11. After striking a foreign object, stop the engine, disconnect the spark plug wire and ground against the engine. Thoroughly inspect the machine for any damage. Repair the damage before starting and operating.
12. Disengage all clutch levers (if fitted) and stop engine before you leave the operating position (behind the handles). Wait until the tines come to a complete stop before unclogging the tines, making any adjustments, or inspections.
13. Never run an engine indoors or in a poorly ventilated area. Engine exhaust contains carbon monoxide, an odorless and deadly gas.
14. Muffler and engine become hot and can cause a burn. Do not touch.
15. Use caution when tilling near fences, buildings and underground utilities. Rotating tines can cause property damage or personal injury.
16. Do not overload machine capacity by attempting to till soil too deep at too fast of a rate.
17. If the machine should start making an unusual noise or vibration, stop the engine, disconnect the spark plug wire and ground it against the engine. Inspect thoroughly for damage. Repair any damage before starting and operating.
18. Keep all shields, guards, and safety devices in place and operating properly.
19. Never pick up or carry machine while the engine is running.
20. Use only attachments and accessories approved by the manufacturer. Failure to do so can result in personal injury.
21. If situations occur which are not covered in this manual, use care and good judgement. Contact Customer Support for assistance and the name of you nearest servicing dealer..

Maintenance & Storage

1. Keep machine, attachments and accessories in safe working order.
2. Allow a machine to cool at least five minutes before storing. Never tamper with safety devices. Check their proper operation regularly.
3. Check bolts and screws for proper tightness at frequent intervals to keep the machine in safe working condition. Also, visually inspect machine for any damage.
4. Before cleaning, repairing, or inspecting, stop the engine and make certain the tines and all moving parts have stopped. Disconnect the spark plug wire and ground it against the engine to prevent unintended starting.
5. Do not change the engine governor settings or over-speed the engine. The governor controls the maximum safe operating speed of engine.
6. Maintain or replace safety and instruction labels, as necessary.
7. Follow this manual for safe loading, unloading, transporting, and storage of this machine.
8. Always refer to the operator's manual for important details if the machine is to be stored for an extended period.

9. If the fuel tank has to be drained, do this outdoors.
10. Observe proper disposal laws and regulations for gas, oil, etc. to protect the environment.
11. According to the Consumer Products Safety Commission (CPSC) and the U.S. Environmental Protection Agency (EPA), this product has an *Average Useful Life* of seven (7) years, or 130 hours of operation. At the end of the *Average Useful Life* have the machine inspected annually by an authorized service dealer to ensure that all mechanical and safety systems are working properly and not worn excessively. Failure to do so can result in accidents, injuries or death.

Notice Regarding Emissions

Engines which are certified to comply with California and federal EPA emission regulations for SORE (Small Off Road Equipment) are certified to operate on regular unleaded gasoline, and may include the following emission control systems: Engine Modification (EM), Oxidizing Catalyst (OC), Secondary Air Injection (SAI) and Three Way Catalyst (TWC) if so equipped.

Spark Arrestor

WARNING! This machine is equipped with an internal combustion engine and should not be used on or near any unimproved forest-covered, brushcovered or grass-covered land unless the engine's exhaust system is equipped with a spark arrestor meeting applicable local or state laws (if any).

If a spark arrestor is used, it should be maintained in effective working order by the operator. In the State of California the above is required by law (Section 4442 of the California Public Resources Code). Other states may have similar laws. Federal laws apply on federal lands.
A spark arrestor for the muffler is available through your nearest engine authorized service dealer or contact the service department, P.O. Box 361131 Cleveland, Ohio 44136-0019.

Safety Symbols

This page depicts and describes safety symbols that may appear on this product. Read, understand, and follow all instructions on the machine before attempting to assemble and operate.

Symbol	Description
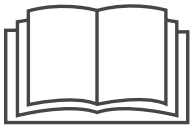	READ THE OPERATOR'S MANUAL(S) Read, understand, and follow all instructions in the manual(s) before attempting to assemble and operate
	WARNING— ROTATING TINES Do not put hands or feet near rotating parts. Contact with the rotating parts can amputate hands and feet.
	WARNING— ROTATING TINES Do not put hands or feet near rotating parts. Contact with the rotating parts can amputate hands and feet.
	WARNING—GASOLINE IS FLAMMABLE Allow the engine to cool at least two minutes before refueling.
	WARNING— CARBON MONOXIDE Never run an engine indoors or in a poorly ventilated area. Engine exhaust contains carbon monoxide, an odorless and deadly gas.
	WARNING— HOT SURFACE Engine parts, especially the muffler, become extremely hot during operation. Allow engine and muffler to cool before touching.

WARNING! Your Responsibility—Restrict the use of this power machine to persons who read, understand and follow the warnings and instructions in this manual and on the machine.

SAVE THESE INSTRUCTIONS!

Assembly & Set-Up

3

Contents of Carton

- One Tiller
- One Engine Operator's Manual
- One Handlebar Assembly
- One Handle Crank w/ Lock Nut
- One Operator's Manual

NOTE: This Operator's Manual covers several models. Garden Tiller features may vary by model. Not all features in this manual are applicable to all garden tiller models and the garden tiller depicted may differ from yours.

NOTE: All references to the right or left side of the tiller are from the operator's position.

WARNING! To prevent personal injury or property damage, do not start the engine until all assembly steps are complete and you have read and understand the Safe Operation Practices Section and the Operating Section in this manual.

Assembly

Unpacking Instructions

NOTE: While unpacking, do not severely bend any of the control cables.

1. The tiller is heavy, do not attempt to remove it from the shipping platform until instructed to do so in these assembly steps.
2. Remove all parts from the carton. Check that you have the items listed in the Contents of Carton list (contact your local dealer or the Cub Cadet technical service representative if items are missing or damaged).
3. Remove any packaging material from the carton. Remove any staples from the bottom of the carton and remove the carton from the shipping platform.

Handle

1. Install the handle onto the tiller using the hardware pre-installed on the handle mounting brackets and included with bag with the Operators Manuals. This consists of a 5⁄16-18 x 3.00 hex screw, a handle crank, retainer bracket, a bell washer and two 5⁄16-18 flange lock nuts. Remove this hardware from the handle mounting brackets on the tiller.
2. Insert the handle into the handle mounting brackets, lining up the pre-drilled holes. Insert the 5⁄16-18 x 3.00 hex screw through the belleville washer and into the bottom hole from the left hand side through to the right side. Place the round hole end of the retainer bracket over the hex screw and secure loosely with a 5⁄16-18 flange lock nut removed earlier. See Figure 3-1.

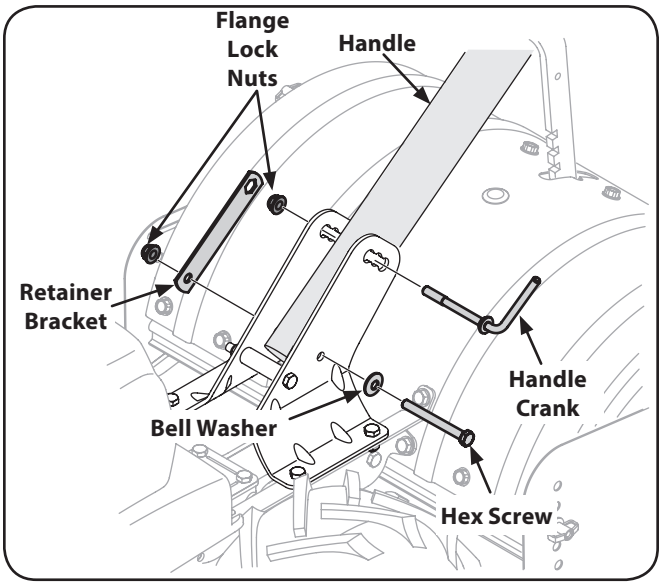

Figure 3-1

NOTE: The bell washer should be positioned with the top of the bell shape towards the hex screw which will create tension and further secure the flange lock nut once tightened. Do not tighten this hardware at this time.

3. Install the handle crank into the top hole of the mounting bracket from the left hand side of the handle assembly, secure with the other flange lock nut previously removed. Fit the hex end of the retainer bracket over the flange lock nut. See Figure 3-1.
4. Tighten the hex bolt installed in Step 2 at this time. Be careful not to overtighten this hardware.
5. With the handle in the desired position, tighten the handle-crank at this time.

Attaching the Cable

To attach the cables, follow these steps:

1. Route the cable along the handle assembly on the right-hand side. See Figure 3-2.

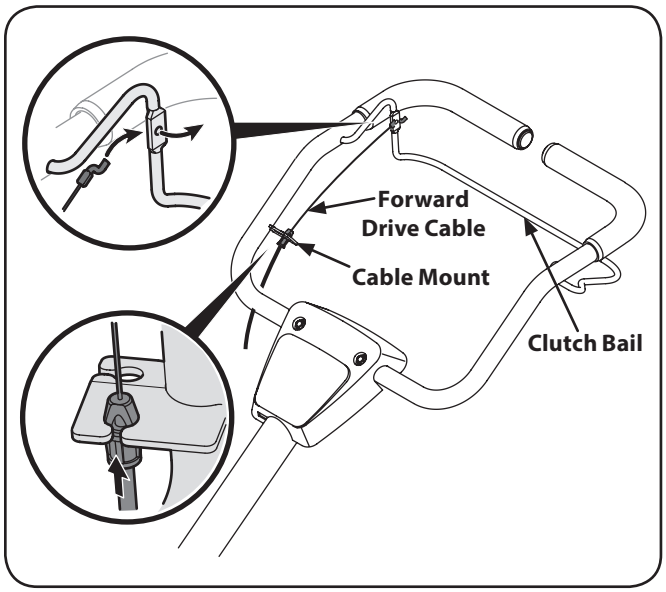

Figure 3-2

2. Connect the forward drive cable to the clutch bail by feeding the z-hook through the hole on the clutch bail from the outside towards the inside. See Figure 3-2.
3. Snap the cable housing clips into the handle assembly cable mount as shown in Figure 3-2. The clip feeds into the lower position on the handle assembly. See Figure 3-2.

   NOTE: To test the function of the clutch bail, lift the bail to the handle and release it. The bail should return to its neutral position. If it doesn't, contact your local dealer for technical assistance.

4. Clip the cable into the cable guide located on the handle assembly panel as seen in Figure 3-3.

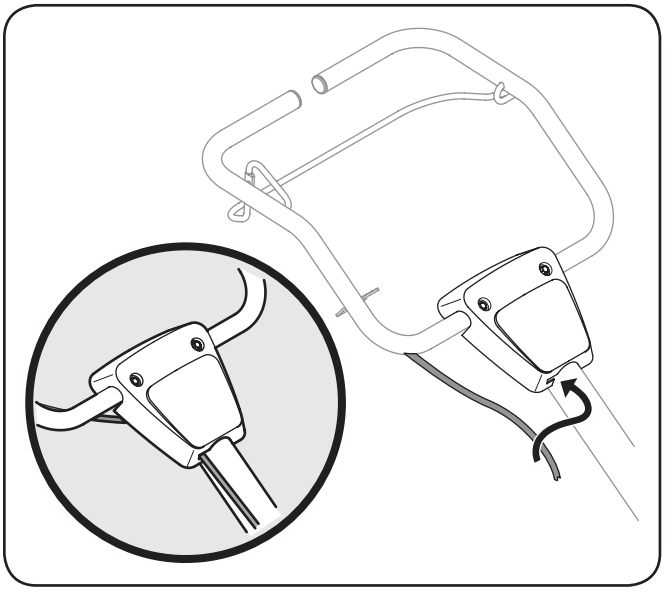

Figure 3-3

Move Tiller Off Crate

To roll the tiller off the shipping platform, put the wheels in freewheel, if they are not already from the factory, as follows:

1. Place a sturdy block under the transmission to raise one wheel about 1" off the ground. Remove the click pin from the wheel hub and wheel shaft. See Figure 3-4.

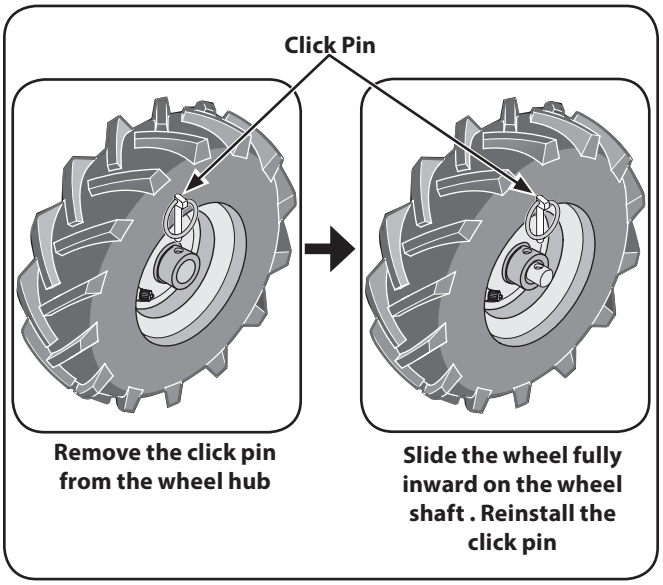

Figure 3-4

2. Slide the wheel fully inward on the wheel shaft . Reinstall the click pin through the wheel shaft only (not through the wheel hub). See Figure 3-4. The wheel should now spin freely (freewheel) on the wheel shaft. Repeat with the other wheel.
3. Use the handlebar to roll the tiller to a flat area.

   NOTE: Before starting the engine, the wheels must be placed in the WHEEL DRIVE position (pins through wheel hubs and wheel shaft).

4. Once the tiller is off the crate, place the wheels in the WHEEL DRIVE position, remove the click pin, slide the wheel fully inward and reinstall the click pin.

Set-Up

Tire Pressure

Check the air pressure with a tire gauge. Deflate or inflate the tires equally to between 15 and 20 PSI. DO NOT EXCEED 20 P.S.I.

> ***NOTE:*** Be sure that both tires are inflated equally or the tiller will pull to one side.

Gas & Oil Fill Up

WARNING! Use extreme care when handling gasoline. Gasoline is extremely flammable and the vapors are explosive. Never fuel the machine indoors or while the engine is hot or running. Extinguish cigarettes, cigars, pipes and any other sources of ignition.

Oil

This machine was shipped WITHOUT oil in the engine. Oil is included in the plastic literature bag packed with the tiller. Add the oil as instructed in the Engine Operator's Manual. Check oil level before each operation to ensure adequate oil in the engine. For instructions, refer to the Engine Operator's Manual.

Gasoline

Refer to the Engine Operator's Manual for information on gasoline fill-up and gasoline type.

Transmission/Gear Oil

The transmission was filled with gear oil at the factory. However, you should check the gear oil level at this time to make certain it is correct.

> ***NOTE:*** Do not operate the tiller if the gear oil level is low. Doing so will result in severe damage to the transmission components.

1. With the tiller on level ground, pull the Depth Regulator Lever back and then all the way up until the lowest notch in the lever is engaged. See Figure 3-5.

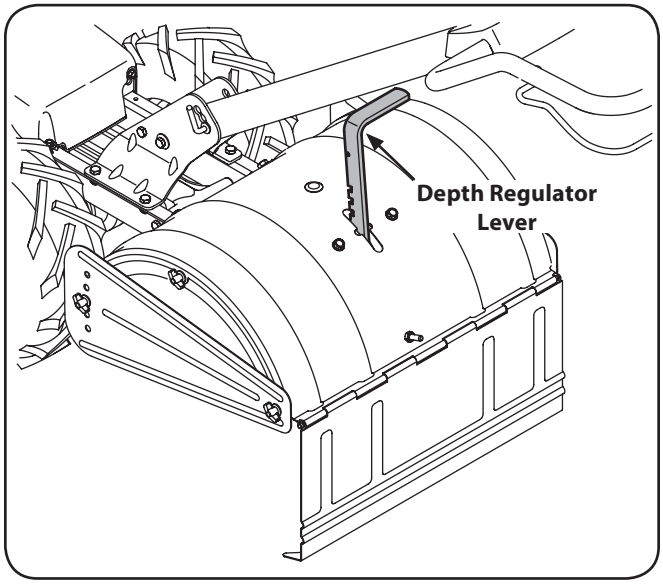

Figure 3-5

2. Remove the oil fill plug from the transmission housing cover and locate the main drive shaft situated inside the housing. See Figure 3-6.

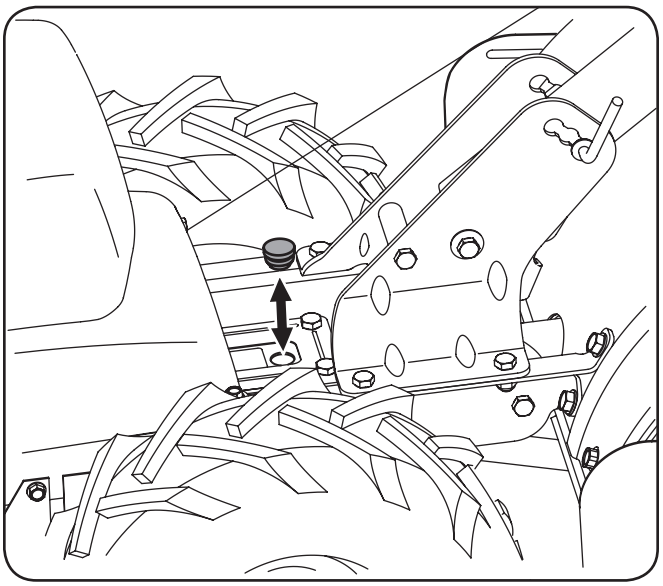

Figure 3-6

3. The gear oil level is correct if the gear oil is approximately halfway up the side of the main drive shaft.
4. If the oil level is low, refer to the Maintenance & Adjustments Section for instructions on adding gear oil.

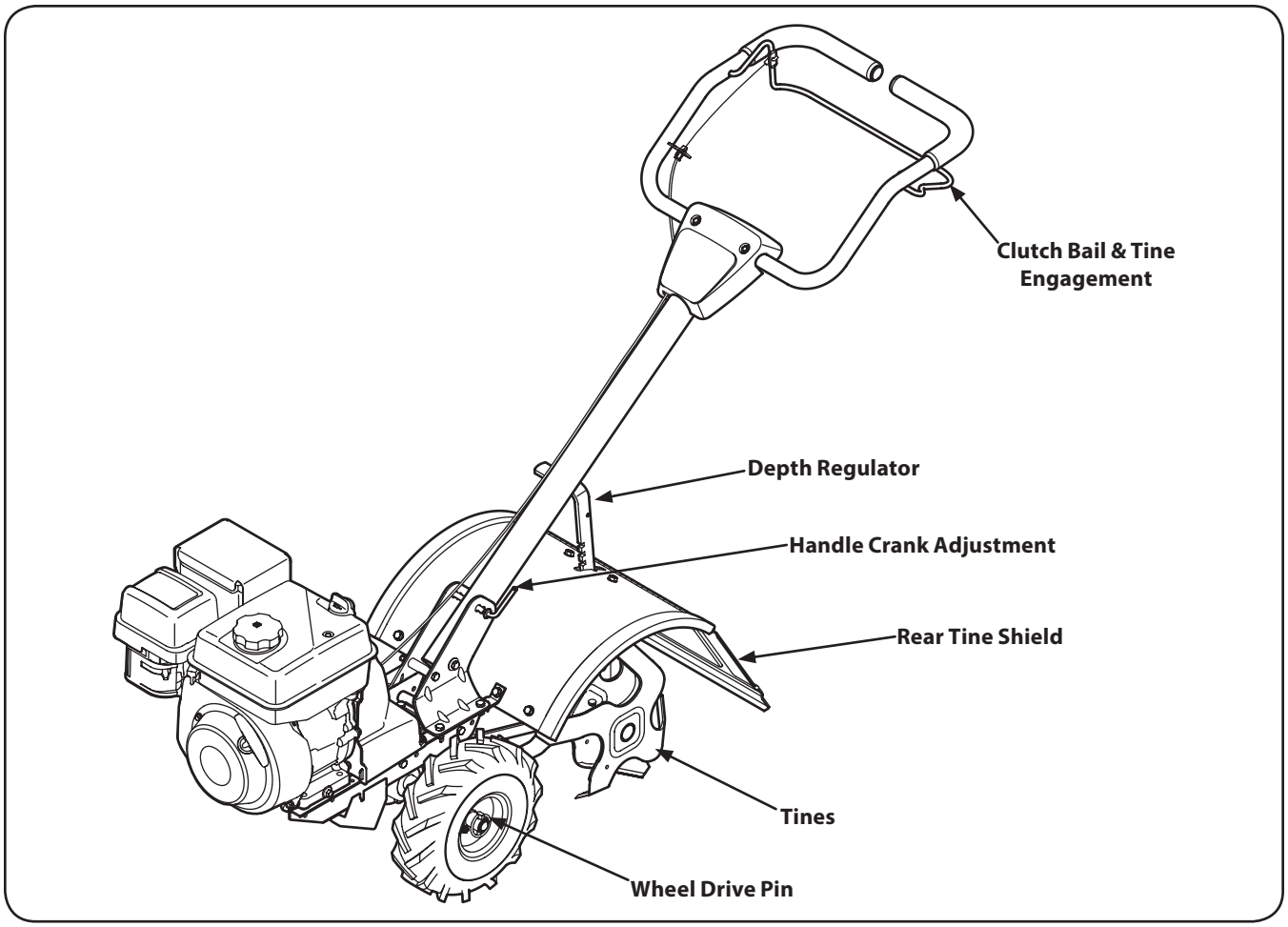

NOTE: This Operator's Manual covers several models. Garden tiller features may vary by model. Not all features in this manual are applicable to all garden tiller models and the garden tiller depicted may differ from yours.

NOTE: All references to the right or left side of the tiller are from the operator's position.

WARNING! Before operating your machine, carefully read and understand all safety, controls and operating instructions in this manual and on the decals on the machine. Failure to follow these instructions can result in serious personal injury.

Clutch Bail & Tine Engagement

The clutch bail controls the engagement of the forward drive of the wheels and tines.

Depth Regulator Lever

This lever controls the tilling depth of the tines. Pull the lever back and slide it up or down to engage the notched height settings.

Handle Crank Assembly

The handle crank assembly is used to adjust the handle height and is adjustable to three different settings. In general, adjust the handlebars so they are at waist level when the tines are 3-4" in the ground.

Rear Tine Shield

The rear tine shield protects the operator from flying debris while also smoothing out freshly tilled soil.

Tines

Your tiller's tines are a series of hoes arranged on a revolving power-driven shaft.

Wheel Drive Pins

Each wheel is equipped with a wheel drive click pin that secures the wheel to the wheel shaft. The wheels can be positioned in either a WHEEL DRIVE or a FREEWHEEL mode.

Operation

5

WARNING: Before operating your machine, carefully read and understand this manual and all of its safety, operating and maintenance sections and instructions, along with all of the decals on the machine. Failure to follow these instructions can result in serious personal injury.

Introduction

Read this Operation Section and the Engine Operator's Manual before you start the engine. Then, take the time to familiarize yourself with the basic operation of the tiller before using it in the garden.

Find an open, level area and practice using the tiller controls without the tines engaging the soil (put tines in "transport" setting).

Only after you've become completely familiar with the tiller should you begin using it in the garden.

To Put The Tines in Transport:

Pull back on the depth adjustment bracket (A) and push down (B) until the bracket reaches the highest notch. See Figure 5-1. Then release the bracket (C).

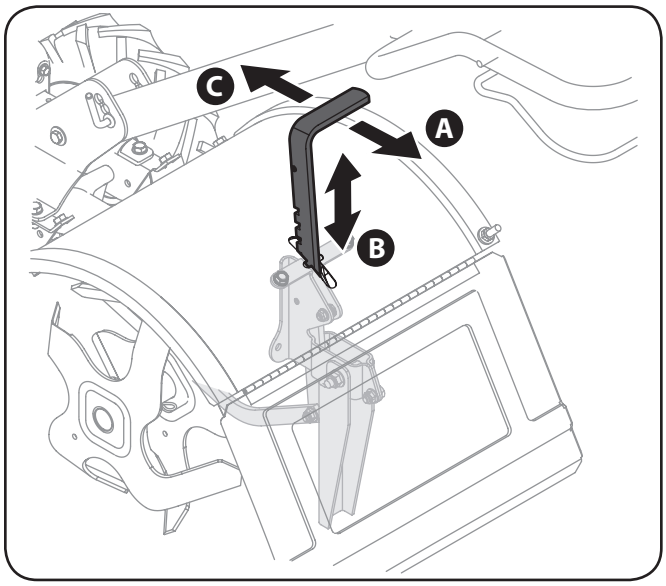

Figure 5-1

Break-In Operation

Perform the following maintenance after the first five (5) hours of new operation (see the Maintenance & Adjustments Section in this manual).

1. Change engine oil.
2. Check for loose or missing hardware on tiller. Tighten or replace as needed.
3. Check transmission gear oil level.

Starting & Stopping the Engine

Pre-Start Checklist

With the spark plug wire disconnected from the spark plug, perform the following checks and services before each use:

1. Read the Safe Operation section in this manual. Read the Controls & Features section in this manual. Read the Engine Operator's Manual.
2. Put the wheels in the WHEEL DRIVE position (wheel pins must be through the holes in the wheel hubs and the wheel shaft).
3. Check tiller for loose or missing hardware. Service as required.
4. Check engine oil level. See Engine Maintenance & Adjustments section.
5. Check that all safety guards and covers are in place.
6. Check air cleaner and engine cooling system. See the Engine Operator's Manual.

WARNING! GASOLINE IS HIGHLY FLAMMABLE AND ITS VAPORS ARE EXPLOSIVE. Follow the gasoline safety rules in the Important Safe Operation Practices section of this manual. Failure to follow gasoline safety instructions can result in serious personal injury and property damage.

7. Fill the fuel tank with gasoline according to the directions in the Engine Operator's Manual. Follow all instructions and safety rules carefully.
8. Attach the spark plug wire to the spark plug.

Starting & Stopping the Engine

WARNING! To help prevent serious personal injury or damage to equipment, put both wheels in the WHEEL DRIVE position. Never have wheels in FREEWHEEL position when the engine is running. When the wheels are in FREEWHEEL, they do not hold back the tiller and the tines could propel the tiller rapidly forward or backward. Put the Forward Clutch Bail in the neutral (disengaged) position by releasing the lever.

WARNING! Never run the engine indoors or in an enclosed, poorly ventilated area. Engine exhaust contains carbon monoxide, an odorless and deadly gas. Avoid the engine muffler and nearby areas. Temperatures in these areas may exceed 150° F.

1. Complete the Pre-Start Checklist above on this page.
2. Put the wheels in the WHEEL DRIVE position by removing the click pins, sliding the wheel all the way in and reinstalling the click pin through the wheel hubs and wheel shaft.
3. Move the Depth Regulator Lever all the way down to the "transport" position, so that the tines clear the ground.
4. Release all of the controls on the tiller and refer the Engine Operator's Manual for engine starting and stopping instructions.

To Engage Drive & Tines

1. For forward motion of the wheels and power to the tines pull the Forward Clutch Bail up against the handlebar. Release the bail to stop the forward motion of wheels and tines.
2. When tilling, relax and let the wheels pull the machine while the tines dig. Walk behind and a little to one side of the tiller. Use one hand, yet keep a light — but secure — grip on the handlebar while keeping your arm loose.
3. Let the tiller move at its own pace and do not push down on the handlebars to try and force the tines to dig deeper — this takes weight off the wheels and reduces traction.

WARNING! Do not push down on the handlebars to try to make the tiller till more deeply. This prevents the wheels from holding the tiller back and can allow the tines to rapidly propel the tiller forward, which could result in loss of control, property damage, or personal injury.

4. To stop/disengage the drive/tines release the clutch bail.

Turning the Tiller

1. Practice turning the tiller in a level, open area. Be very careful to keep your feet and legs away from the tines.
2. To begin a turn, lift the handlebars until the tines are out of the ground and the engine and tines are balanced over the wheels.
3. With the tiller balanced, push sideways on the handlebar to steer in the direction of the turn. After turning, slowly lower the tines into the soil to resume tilling.

Setting The Depth

Tilling depth is controlled by the depth stake which can be adjusted to five different settings.

WARNING: Be certain the spark plug wire is disconnected and grounded against the engine when performing any adjustments.

- When using the tiller for the first time, use the second adjustment hole from the top (1" of tilling depth).
- When breaking up sod and for shallow cultivation, use the setting which gives 1" of tilling depth (second hole from the top).
- For further depth, raise the depth stake and also make one or two more passes over the area.
- When tilling loose soil, the depth stake may be raised to its highest position (use bottom adjustment hole) to give the deepest tilling depth.
- To transport tiller, lower the depth stake (use top adjustment hole).

To adjust the depth stake, pull back on the depth adjustment bracket (A) and push up or down (B) until the bracket reaches the desired position, see Figure 5-1, then release the bracket (C).

Adjusting the Handle Height

The handle should be adjusted so that when the tiller is digging 3-4" into the soil, the handle falls to about waste-high. To adjust the handle, simply loosen the handle adjustment crank, move the handle to the desired height and retighten the adjustment crank. See Figure 5-2.

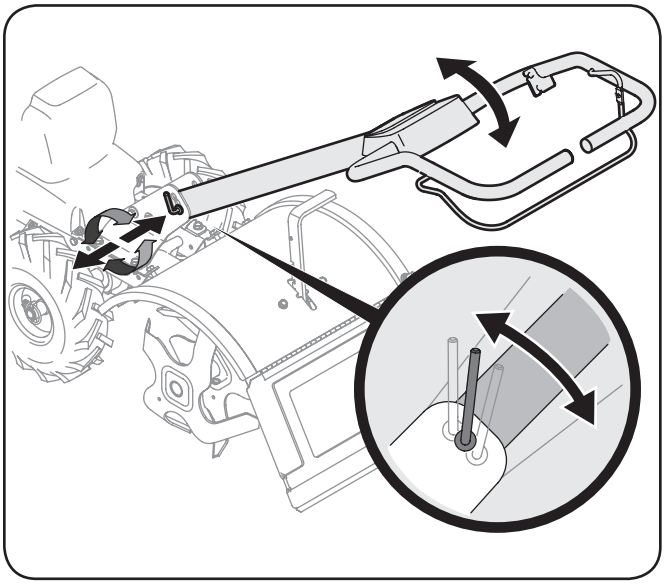

Figure 5-2

Tilling Tips & Techniques

Tilling Depth

WARNING! Before tilling, contact your telephone or utilities company and inquire if underground equipment/ lines are used on your property. Do not till near buried electric cables, telephone lines, pipes or hoses.

- This is a CRT (counter-rotating tine) tiller. As the wheels pull forward, the tines rotate backward. This creates an "uppercut" tine action which digs deeply, uprooting soil and weeds. Don't overload the engine, but dig as deeply as possible on each pass. On later passes, the wheels may tend to spin in the soft dirt. Help them along by lifting up slightly on the handlebar (one hand, palm up, works most easily).
- Avoid the temptation to push down on the handlebars in an attempt to force the tiller to dig deeper. Doing so takes the weight off the powered wheels, causing them to lose traction. Without the wheels to hold the tiller back, the tines will attempt to propel the tiller backward, towards the operator.

- When cultivating (breaking up the surface soil around the plants to destroy weeds, see Figure 5-3), adjust the tines to dig only 1" to 2" deep. Using the shallow tilling depth helps prevent injury to the plants whose roots often grow close to the surface. If needed, lift up on the handlebars slightly to prevent the tines from digging too deeply. (Cultivating on a regular basis not only eliminates weeds, it also loosens and aerates the soil for better moisture absorption and faster plant growth.) Watering the garden area a few days prior to tilling will make tilling easier, as will letting the newly worked soil set for a day or two before making a final, deep tilling pass.

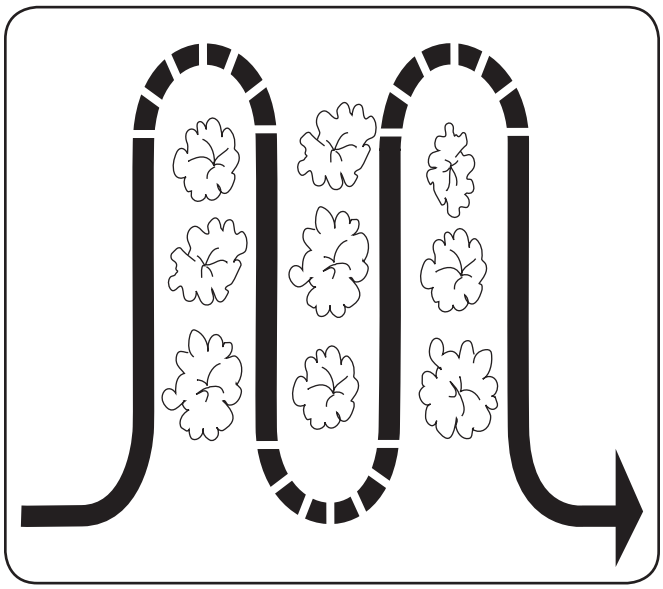

Figure 5-3

Choosing Correct Wheel & Tine Speeds

With experience, you will find the tilling depth and tilling speed combination that is best for your garden. Set the engine throttle lever at a speed to give the engine adequate power and yet allow it to operate at the slowest possible speed until you have achieved the maximum tilling depth you desire. Faster engine speeds may be desirable when making final passes through the seedbed or when cultivating. Selection of the correct engine speed, in relation to the tilling depth, will ensure a sufficient power level to do the job without causing the engine to labor.

Suggested Tilling Patterns

- When preparing a seedbed, go over the same path twice in the first row, then overlap one-half the tiller width on the rest of the passes. See Figure 5-4.

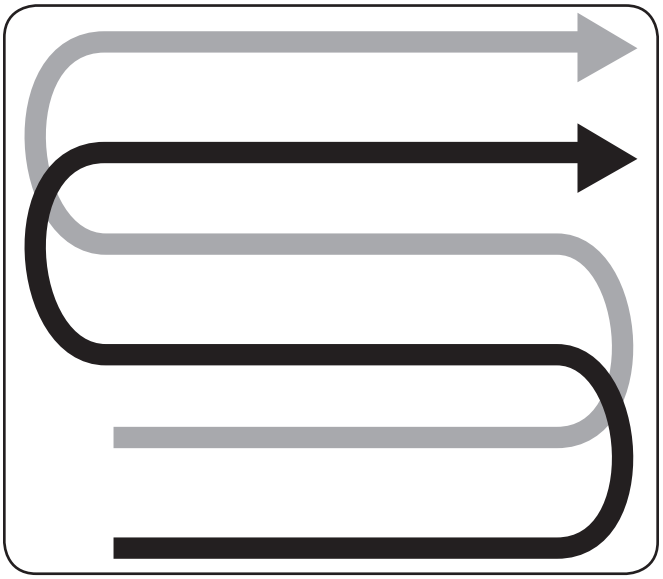

Figure 5-4

- When finished in one direction, make a second pass at a right angle, as shown in Figure 5-5. Overlap each pass for the best results (in very hard ground, it may take three or four passes to thoroughly pulverize the soil.)

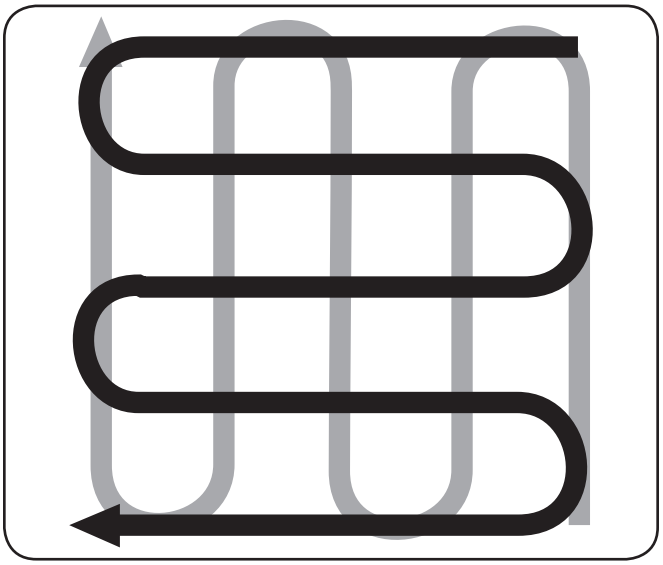

Figure 5-5

- If the garden size will not permit lengthwise and then crosswise tilling, then overlap the first pass by one-half a tiller width, followed by successive passes at one-quarter width. See Figure 5-6.

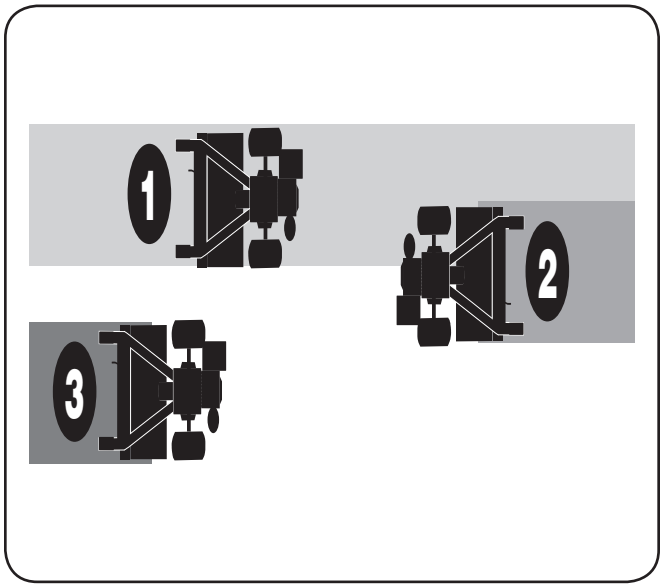

Figure 5-6

Tilling on a Slope

WARNING! Do not operate the tiller on a slope too steep for safe operation. Till slowly and be sure you have good footing. Never permit the tiller to freewheel down slopes. Failure to follow this warning could result in personal injury.

1. Till only on moderate slopes, never on steep ground where the footing is difficult.
2. Tilling up and down slopes is recommended over terracing. Tilling vertically on a slope allows maximum planting area and also leaves room for cultivating.

   NOTE: When tilling on slopes, be sure the correct oil level is maintained in the engine (check every one-half hour of operation). The incline of the slope will cause the oil to slant away from its normal level and this can starve engine parts of required lubrication. Keep the motor oil level at the full point at all times.

Tilling Up and Down a Slope

1. To keep soil erosion to a minimum, be sure to add enough organic matter to the soil so that it has good moisture-holding texture and try to avoid leaving footprints or wheel marks.
2. When tilling vertically, try to make the first pass uphill as the tiller digs more deeply going uphill than it does downhill. In soft soil or weeds, you may have to lift the handlebars slightly while going uphill. When going downhill, overlap the first pass by about one-half the width of the tiller.

Terrace Gardening

1. To create a terrace, start at the top of the slope and work down. Go back and forth across the first row as shown in Figure 5-7.

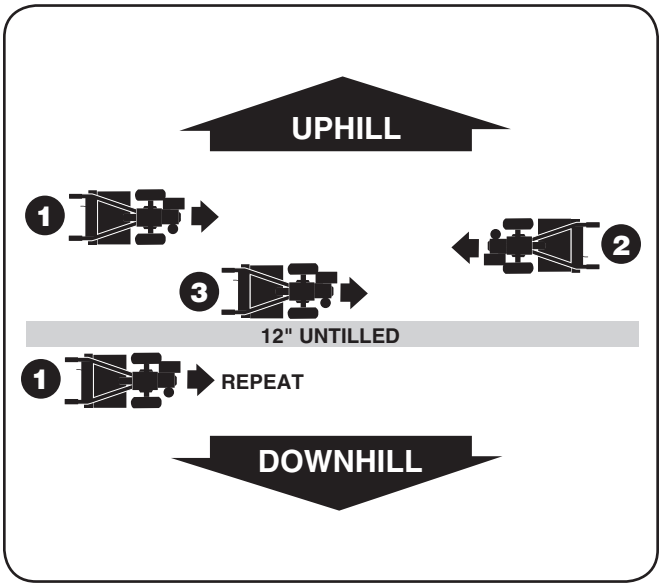

Figure 5-7

2. Each succeeding lower terrace is started by walking below the terrace you are preparing. For added stability of the tiller, always keep the uphill wheel in the soft, newly tilled soil. Do not till the last 12" or more of the downhill outside edge of each terrace. This untilled strip helps prevent the terraces from breaking apart and washing downhill. It also provides a walking path between the rows.

Clearing the Tines

- The tines have a self-clearing action which eliminates most of the tangling of debris. However, occasionally dry grass, stringy stalks or tough vines may become tangled. Follow these procedures to help avoid tangling and to clear the tines, if necessary.
- To reduce tangling, set the depth regulator deep enough to get maximum "chopping" action as the tines chop the material against the ground. Also, try to till under crop residues or cover crops while they are green, moist and tender.
- While tilling, try swaying the handlebars from side to side (about 6" to 12"). This "fishtailing" action often clears the tines of debris.

WARNING! Before clearing the tines by hand, stop the engine, allow all moving parts to stop and disconnect the spark plug wire. Failure to follow this warning could result in personal injury.

Loading & Unloading the Tiller

WARNING! Loading and unloading the tiller into a vehicle is potentially hazardous and doing so is not recommended unless absolutely necessary, as this could result in personal injury or property damage.

However, if you must load or unload the tiller, follow the guidelines given next.

- Before loading or unloading the tiller, stop the engine, wait for all parts to stop moving, disconnect the spark plug wire and let the engine and muffler cool.
- The tiller is too heavy and bulky to be safely lifted by one person. Two or more people should share the load.
- Use sturdy ramps and manually — with the engine shut off — roll the tiller into and out of the vehicle. Two or more people are needed to do this.
- The ramps must be strong enough to support the combined weight of the tiller and any handlers. The ramps should provide good traction to prevent slipping; they should also have side rails to guide the tiller along the ramps; and they should have a locking device to secure them to the vehicle.
- The handlers should wear sturdy footwear that will help to prevent slipping.
- Position the loading vehicle so that the ramp angle is as flat as possible (the less incline to the ramp, the better). Turn the vehicle's engine off and apply the parking brake.
- When going up the ramps, stand in the normal operating position and push the tiller ahead of you. Have a person at each side to turn the wheels.
- When going down the ramps, walk backward with the tiller following you. Keep alert for any obstacles behind you. Position a person at each wheel to control the speed of the tiller. Never go down the ramps tiller-first, as the tiller could tip forward.
- Place wooden blocks on the downhill side of the wheels if you need to stop the tiller from rolling down the ramp. Also, use the blocks to temporarily keep the tiller in place on the ramps (if necessary), and to chock the wheels in place after the tiller is in the vehicle.
- After loading the tiller, prevent it from rolling by engaging the wheels in the WHEEL DRIVE position. Chock the wheels with blocks and securely tie the tiller down.

Maintenance Schedule

	Check After First 2 Hours	Before Each Use	Every 10 Hours	Every 30 Hours
Clean Engine		✓		
Check Drive Belt Tension	✓		✓	
Check Nuts and Bolts	✓		✓	
Lubricate Tiller			✓	
Check Gear Oil Level in Transmission				✓
Check Tines for Wear				✓
Check Air Pressure in Tires				✓

WARNING! Before inspecting, cleaning or servicing the machine, shut off the engine, wait for all moving parts to come to a complete stop, disconnect the spark plug wire and move the wire away from the spark plug. Failure to follow these instructions can result in serious personal injury or property damage.

Maintenance

Engine

Refer to the Engine Operator's Manual for all engine maintenance.

Tire Pressure

Check the air pressure in both tires. The air pressure should be between 15-20 PSI. Keep both tires equally inflated to help prevent machine from pulling to one side.

Hardware

Check for loose or missing hardware after every 10 operating hours and tighten or replace — as needed — before reusing the tiller

Be sure to check the screws underneath the tiller hood that secure the transmission cover and the Depth Regulator Lever to the transmission.

Transmission Gear Oil

Check the transmission gear oil after every 30 hours of operation or whenever you notice any oil leak. Operating the tiller when the transmission is low on oil can result in severe damage.

To Check the Transmission Gear Oil Level:

1. Check the gear oil level when the transmission is cool. Gear oil will expand in warm operating temperatures and this expansion will provide an incorrect oil level reading.
2. With the tiller on level ground, pull the Depth Regulator Lever all the way up.
3. Remove the oil fill plug from the transmission housing and look inside the oil fill hole to locate the main drive shaft situated below the hole. See Figure 6-1.

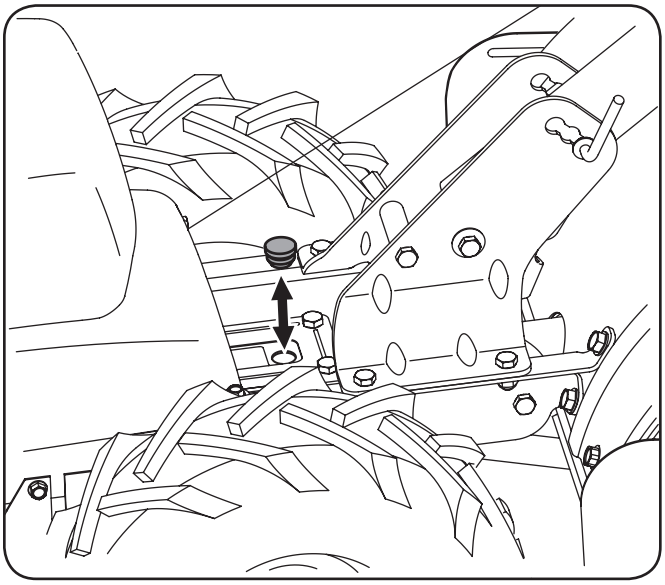

Figure 6-1

4. The gear oil level is correct if the gear oil is approximately halfway up the side of the main drive shaft.
5. If the gear oil level is low, add gear oil as described next. If the gear oil level is okay, securely replace the oil fill plug.

6. If adding only a few ounces of gear oil, use API rated GL-4 or GL-5 gear oil having a viscosity of SAE 140, SAE 85W-140 or SAE 80W-90. If refilling an empty transmission, use only GL-4 gear oil having a viscosity of SAE 85W-140 or SAE 140.
7. While checking frequently to avoid overfilling, slowly add gear oil into the oil fill hole until it reaches the halfway point on the drive shaft.
8. Securely replace the oil fill plug.

Lubrication

After every 10 operating hours, oil or grease the lubrication points shown in Figure 6-2 and described below.

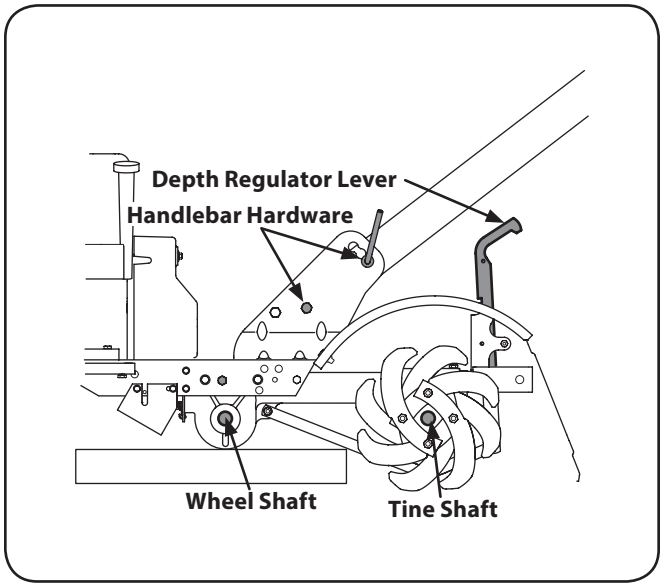

Figure 6-2

Use clean lubricating oil (#30 weight motor oil is suitable) and clean general purpose grease (grease containing a metal lubricant is preferred, if available).

- Remove the wheels, clean the wheel shaft and apply a thin coating of grease.
- Grease the back, front and sides of the depth regulator lever.
- Remove the tines and clean the tine shaft. Use a file or sandpaper to gently remove any rust, burrs or rough spots (especially around the holes in the shaft). Apply grease to the ends of the shaft before installing the tines.
- Oil the threads on the handlebar height adjustment screws and the handlebar attaching screws.

Off-Season Storage

When the tiller won't be used for an extended period, prepare it for storage as follows:

1. Clean the tiller and engine.
2. Do routine tiller lubrication and check for loose parts and hardware.
3. Service the engine as instructed in the seperate engine manual.
4. Engines stored between 30 and 90 days need to be treated with a gasoline stabilizer such as ***STA-BIL®*** and engines stored over 90 days need to be drained of fuel to prevent deterioration and gum from forming in fuel system or on essential carburetor parts. If the gasoline in your engine deteriorates during storage, you may need to have the carburetor, and other fuel system components, serviced or replaced.

WARNING: Drain fuel only into anapproved container outdoors, away from an open flame. Allow engine to cool. Extinguish cigarettes, cigars, pipes, and other sources of ignition prior to draining fuel.

5. Store the tiller in a clean, dry area.
6. Never store the tiller with fuel in the fuel tank in an enclosed area where gas fumes could reach an open flame or spark, or where ignition sources are present (space heaters, hot water heaters, furnaces, etc.).

Belt Replacement

If the drive belt need to be replaced, it is best to replace both belts at the same time. Use only a factory-authorized belt as an "over- the-counter" belt may not perform satisfactorily. The procedure requires average mechanical ability and commonly available tools.

To replace the Drive and Reverse belts, follow these steps:

1. Make sure the tiller is on a flat surface, with the engine turned off and the spark plug wire unplugged and grounded to prevent unintended firing of the engine.
2. Remove the belt cover as seen in Figure 7-1, by first removing the two 1⁄4-20 hex washer screws and one flat washer. Lift the belt cover up and away from the tiller and set in a safe location until reinstallation.

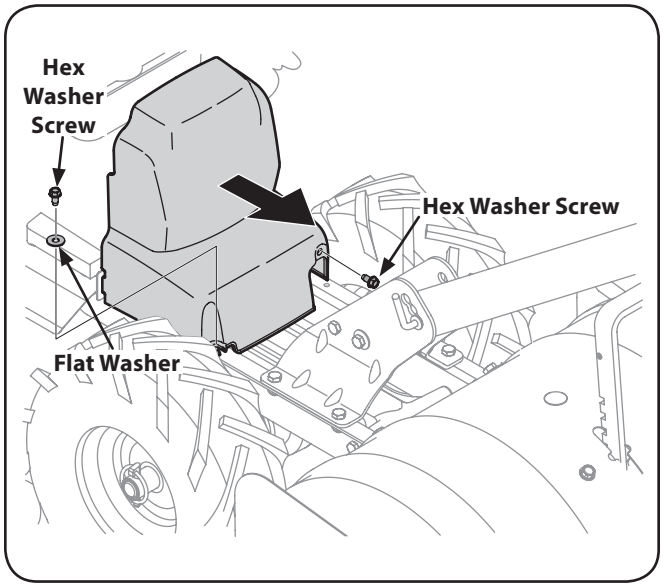

Figure 7-1

3. Remove the four ¼-20 hex washer screws that secure the pulley shield to the frame as seen in Figure 7-2, and remove the pulley shield and set aside in a safe location until reinstallation.

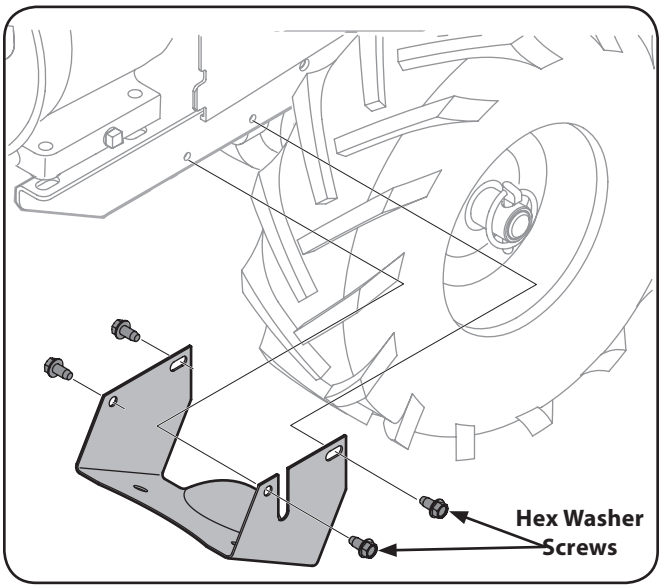

Figure 7-2

4. Remove the idler bracket extension spring from the idler bracket using a pair of needle-nosed pliers. Grab the spring by the end that hooks over the frame, pull it away from the frame, then up and carefully relieve the tension of the spring. See Figure 7-3.

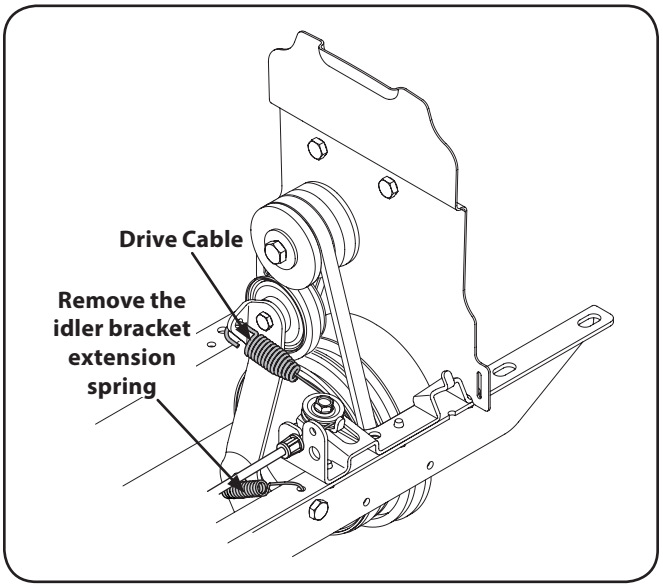

Figure 7-3

5. Unhook the drive cable from the idler bracket. See Figure 7-3.

6. Remove the belt from the transmission, engine and idler pulleys.
7. Replace the old belt with a new belt. Make sure the belt is installed into the pulleys closest to the tines/front of the tiller.
8. Re-install the drive cable on the idler pulley.
9. Carefully re-install the idler bracket extension spring on the idler bracket.
10. Reassemble the tiller in the reverse order in which it was disassembled.

    NOTE: When reinstalling the belt cover, be sure to engage the bail and hold it so that the drive belt is tight before attempting to reinstall the belt cover. This will enable the belt to fall under the belt keeping mechanism built into the belt cover. Failure to do so could damage the belt and/or belt cover.

Tines

The tines will wear with use and should be inspected at the beginning of each tilling season and after every 30 operating hours. The tines can be replaced. Refer to the Illustrated Parts List manual for part numbers and ordering instructions.

Tine Inspection

With use, the tines will become shorter, narrower and pointed. Badly worn tines will result in a loss of tilling depth, and reduced effectiveness when chopping up and turning under organic matter.

Removing/Installing a Tine Assembly

1. Remove the tine shield end covers and side shields by removing the three wing nuts on each side that secure them.
2. A tine assembly consists of a left hand tine assembly and a right hand tine assembly.

   NOTE: The tine assembly moves in a counter-rotating motion with the sharp edges of the tines positioned to enter the soil first when counter-rotating. Note this position of the tines for reinstallation of the new tine assemblies.
3. To remove a tine assembly, simply remove the cotter pin securing the clevis pin as seen in Figure 7-4. Remove the clevis pin and slide the assembly to the outside of the unit and off of the tine shaft.

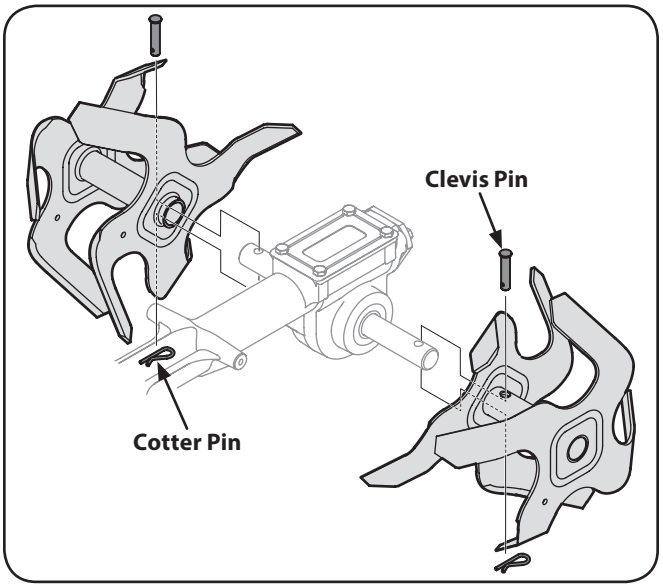

Figure 7-4

4. Before reinstalling the tine assembly, inspect the tine shaft for rust, rough spots or burrs. Lightly file or sand, as needed. Apply a thin coat of grease to the shaft.
5. Install each tine assembly so that the cutting (sharp) edge of the tines will enter the soil first when the tiller moves forward. Keep in mind that these tines are counter rotating, so secure the tine assembly to the tine shaft using the clevis pin and internal cotter pin.

Change Transmission Gear Oil

NOTE: The transmission gear oil does not need to be changed unless it has been contaminated with dirt, sand or metal particles.

See an authorized service dealer to have the transmission gear oil changed. Refer to the phone numbers on page 2 of this manual to locate the nearest service dealer.

Troubleshooting

8

Problem	Cause	Remedy
Wheels/Tines will not turn	1. Improper use of controls. 2. Worn, broken, or mis-adjusted drive belt. 3. Internal transmission wear or damage. 4. Bolt loose in transmission pulley.	1. Review Operation section. 2. Replace or adjust belt. 3. Contact authorized service dealer. 4. Tighten bolt.
Tines turn, but wheels don't	1. Wheel Drive Pins not in WHEEL DRIVE. 2. Bolt loose in transmission pulley. 3. Internal transmission wear or damage.	1. Inserts Drive Pins properly. 2. Tighten bolt. 3. Contact authorized service dealer.
Wheels turn, but tines Don't	1. Tine holder mounting hardware missing. 2. Bolt loose in transmission pulley. 3. Internal transmission wear or damage.	1. Replace hardware. 2. Tighten bolt. 3. Contact authorized service dealer.
Poor tilling performance	1. Worn tines. 2. Improper Depth Regulator setting. 3. Incorrect throttle setting. 4. Forward Drive Belt slipping.	1. Replace Tines. 2. See "Tilling Tips & Techniques." 3. See Maintenance & Adjustments Section. 4. See Maintenance & Adjustments Section.

Component	Part Number and Description	
	954-04090	Forward V-Belt
	946-04506	Forward Drive Cable
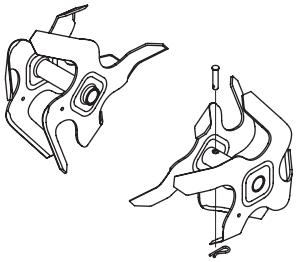	642-05004 642-05003 911-0415 714-04043	4-Point Tine Assembly (RH) 4-Point Tine Assembly (LH) Clevis Pin, .375 x 1.75 Internal Cotter Pin
	934-05049	Wheels, 11 x 4-4

Notes

10

CUB CADET LLC
MANUFACTURER'S LIMITED WARRANTY FOR EDGERS, STRING TRIMMERS & TILLERS

The limited warranty set forth below is given by Cub Cadet LLC with respect to new merchandise purchased and used in the United States, its possessions and territories, and by MTD Products Limited with respect to new merchandise purchased and used in Canada and/or its territories and possessions.

This warranty is in addition to any applicable emissions warranty provided with your product.

"Cub Cadet" warrants this product (excluding its *Normal Wear Parts* as described below) against defects in material and workmanship for a period of three (3) years commencing on the date of original purchase and will, at its option, repair or replace, free of charge, any part found to be defective in materials or workmanship. This limited warranty shall only apply if this product has been operated and maintained in accordance with the Operator's Manual furnished with the product, and has not been subject to misuse, abuse, commercial use, neglect, accident, improper maintenance, alteration, vandalism, theft, fire, water, or damage because of other peril or natural disaster. Damage resulting from the installation or use of any part, accessory or attachment not approved by Cub Cadet for use with the product(s) covered by this manual will void your warranty as to any resulting damage.

Normal Wear Parts are warranted to be free from defects in material and workmanship for a period of thirty (30) days from the date of purchase. Normal wear parts include, but are not limited to items such as: batteries, belts, blades, tines, wheels and tires.

HOW TO OBTAIN SERVICE: Warranty service is available, WITH PROOF OF PURCHASE, through your local authorized service dealer. To locate the dealer in your area:

In the U.S.A.

To locate the dealer in your area, check your Yellow Pages, or contact Cub Cadet LLC at P.O. Box 361131, Cleveland, Ohio 44136-0019, or call 1-877-282-8684, or log on to our Web site at www.cubcadet.com.

In Canada

Contact MTD Products Limited, Kitchener, ON N2G 4J1, or call 1-800-668-1238 or log on to our Web site at www.mtdcanada.com.

This limited warranty does **not** provide coverage in the following cases:

a. The engine or component parts thereof. These items may carry a separate manufacturer's warranty. Refer to applicable manufacturer's warranty for terms and conditions.

b. Routine maintenance items such as lubricants, filters, blade sharpening, tune-ups, brake adjustments, clutch adjustments, deck adjustments, and normal deterioration of the exterior finish due to use or exposure.

c. Cub Cadet does not extend any warranty for products sold or exported outside of the United States and/or Canada, and their respective possessions and territories, except those sold through Cub Cadet's authorized channels of export distribution.

d. Replacement parts that are not genuine Cub Cadet parts.

e. Service completed by someone other than an authorized service dealer.

f. Transportation charges and service calls.

g. Cub Cadet does not warrant this product for commercial use.

No implied warranty, including any implied warranty of merchantability of fitness for a particular purpose, applies after the applicable period of express written warranty above as to the parts as identified. No other express warranty, whether written or oral, except as mentioned above, given by any person or entity, including a dealer or retailer, with respect to any product, shall bind Cub Cadet. During the period of the warranty, the exclusive remedy is repair or replacement of the product as set forth above.

The provisions as set forth in this warranty provide the sole and exclusive remedy arising from the sale. Cub Cadet shall not be liable for incidental or consequential loss or damage including, without limitation, expenses incurred for substitute or replacement lawn care services or for rental expenses to temporarily replace a warranted product.

Some states do not allow the exclusion or limitation of incidental or consequential damages, or limitations on how long an implied warranty lasts, so the above exclusions or limitations may not apply to you.

In no event shall recovery of any kind be greater than the amount of the purchase price of the product sold. **Alteration of safety features of the product shall void this warranty.** You assume the risk and liability for loss, damage, or injury to you and your property and/or to others and their property arising out of the misuse or inability to use the product.

This limited warranty shall not extend to anyone other than the original purchaser or to the person for whom it was purchased as a gift.

HOW STATE LAW RELATES TO THIS WARRANTY: This limited warranty gives you specific legal rights, and you may also have other rights that vary in different jurisdictions.

IMPORTANT: Owner must present Original Proof of Purchase to obtain warranty coverage.

Cub Cadet LLC, P.O. BOX 361131 CLEVELAND, OHIO 44136-0019; Phone: 1-877-282-8684
MTD Canada Limited - KITCHENER, ON N2G 4J1; Phone 1-800-668-1238

GDOC-100087 REV. A